LV291
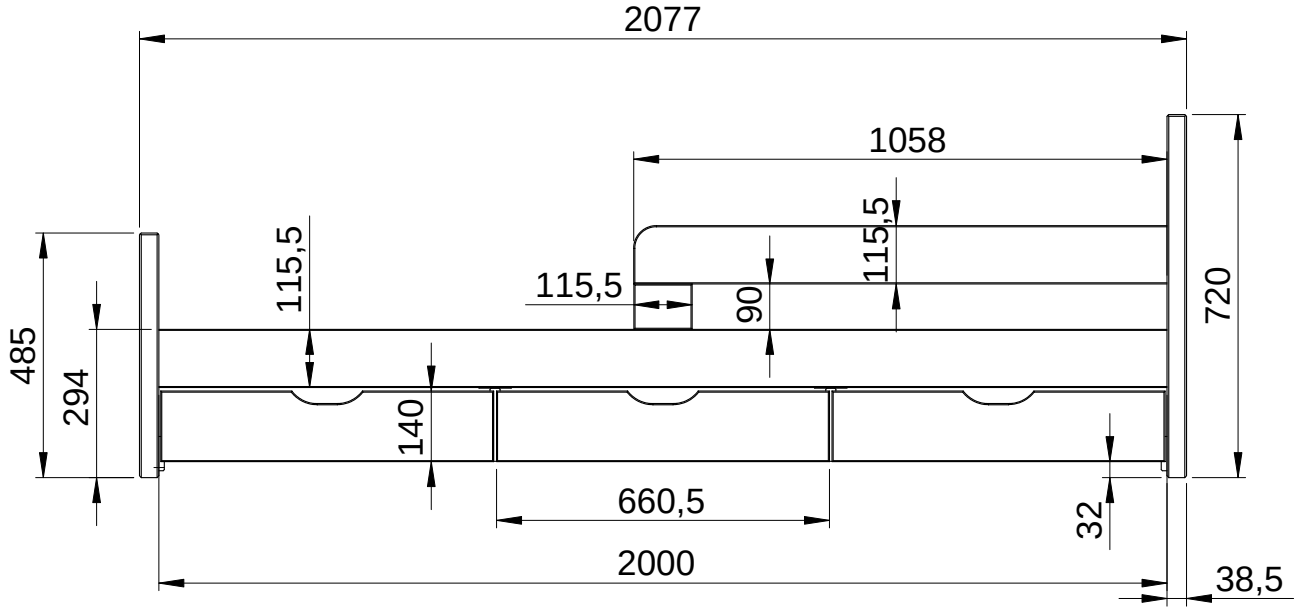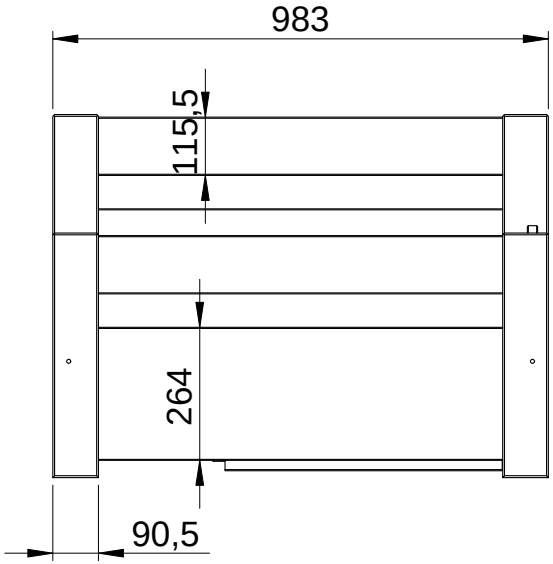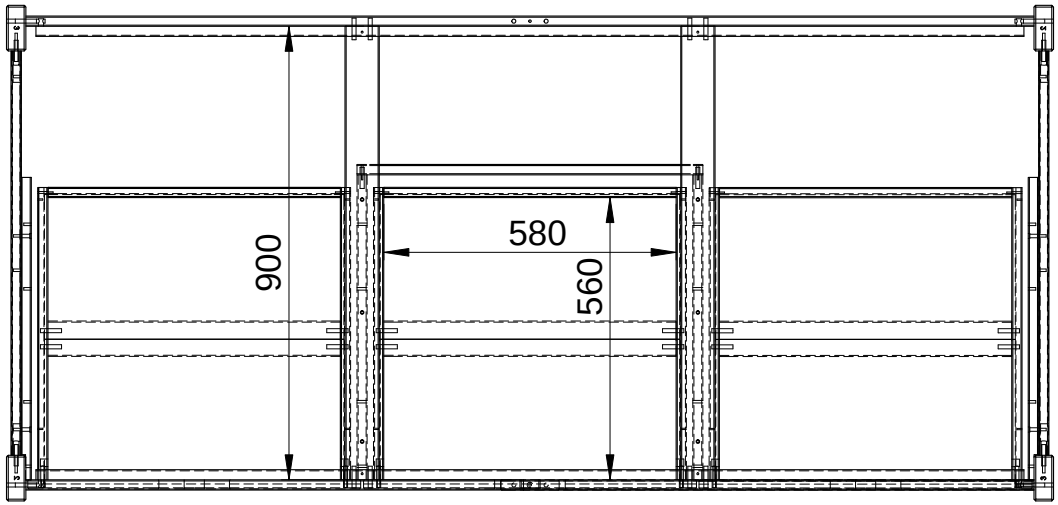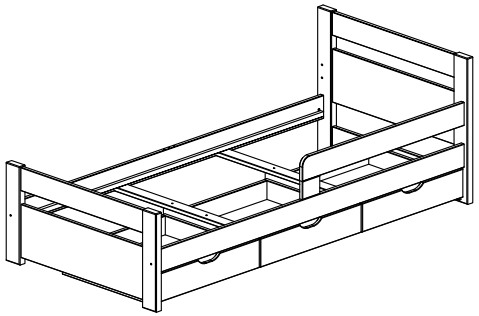
max. mattress 900x2000x170